HBJD-70 Signal Tower Lights HBJD-90 Signal Tower Lights

Features

- Operating Temperature: -25℃~+55℃
- Air Humidity: ≤98%
- Altiude: 2000m
- Vibration Resistance: 50Hz amplitude about 1.2mm
- LED Life: 40000hours LED(Steady Light)
  25000hours(Flashing Light)
- Buzzer Volume: 80~90dB, at 1m
- Pollution Degree: 3

Part Number Description

HBJD – ★ □ ■ / △ / ▲ / ●

Size	Light	Buzzer	Color	Voltage	Mounting Style
70: ø70mm 90: ø90mm	D: Steady Light S: Flashing Light	No letter means no buzzer W: Intermittent Sound Z: Continuous Sound	R G Y Other color can be customzied	AC/DC 24V AC 110V (Customized) AC 220V (Customized)	No letter means standard type L: Base Mounting C1: Side Mounting C2: Side Mounting with Base

Models

Models	Working Status	Part Number	Dimensions
 Color Options: R G Y	Steady Light	HBJD-70D/△/▲	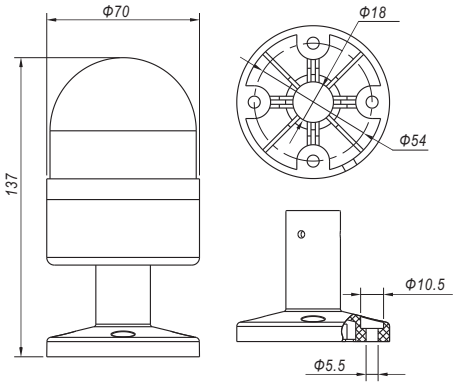
	Flashing Light	HBJD-70S/△/▲	
	Steady Light and Continuous Sound	HBJD-70DZ/△/▲	
	Steady Light and Intermittent Sound	HBJD-70DW/△/▲	
	Flashing Light and Intermittent Sound	HBJD-70SW/△/▲	
 Color Options: R G Y	Steady Light	HBJD-90D/△/▲/●	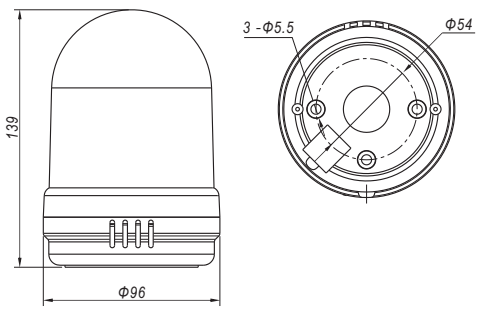
	Flashing Light	HBJD-90S/△/▲/●	
	Steady Light and Continuous Sound	HBJD-90DZ/△/▲/●	
	Steady Light and Intermittent Sound	HBJD-90DW/△/▲/●	
	Flashing Light and Intermittent Sound	HBJD-90SW/△/▲/●	

HBJD-70 Installation Diagram

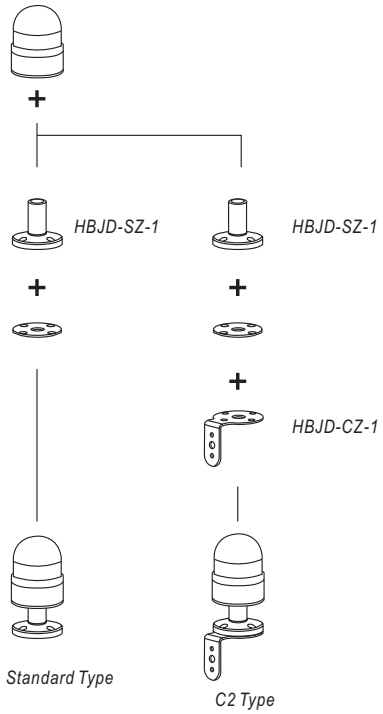

HBJD-90 Installation Diagram

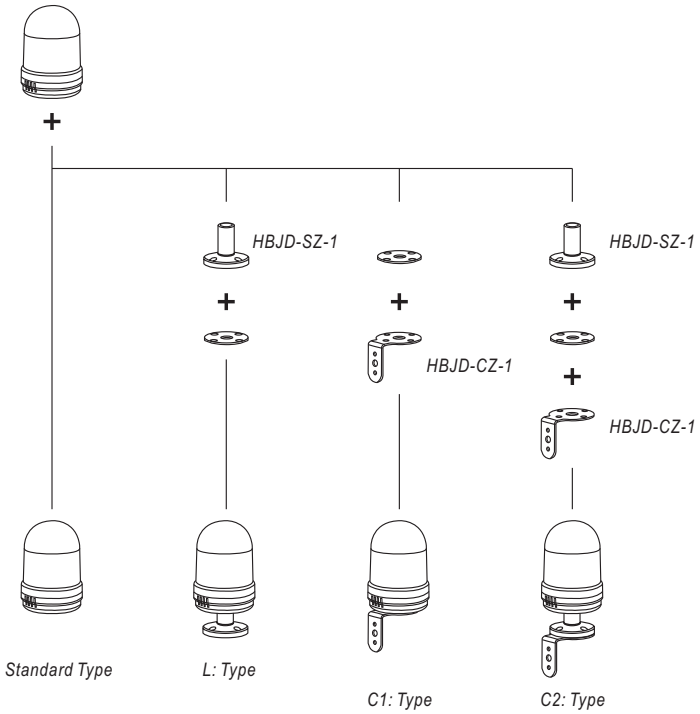

Accessories

Base
HBJD-SZ-1



Side Mounting
HBJD-CZ-1



Dimensions

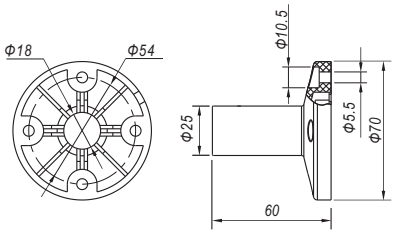

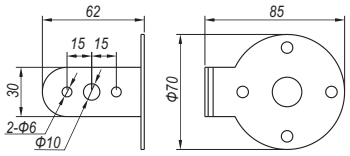

Wiring Diagram

P/N	HBJD-70	HBJD-90
Wiring Diagram	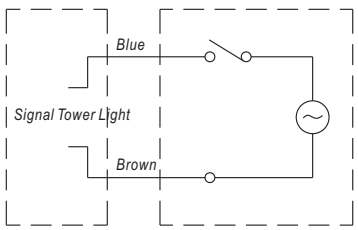	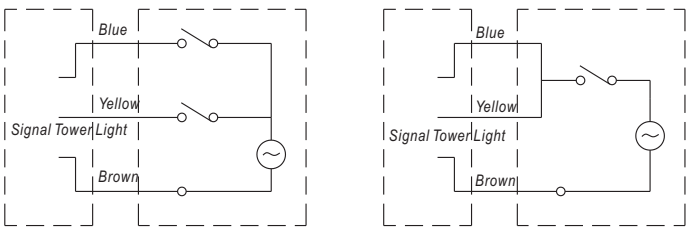
	Note: Light and buzzer are controlled synchronously.	Note: Blue Wire for LED; Yellow Wire for buzzer; Brown: Common Wire.